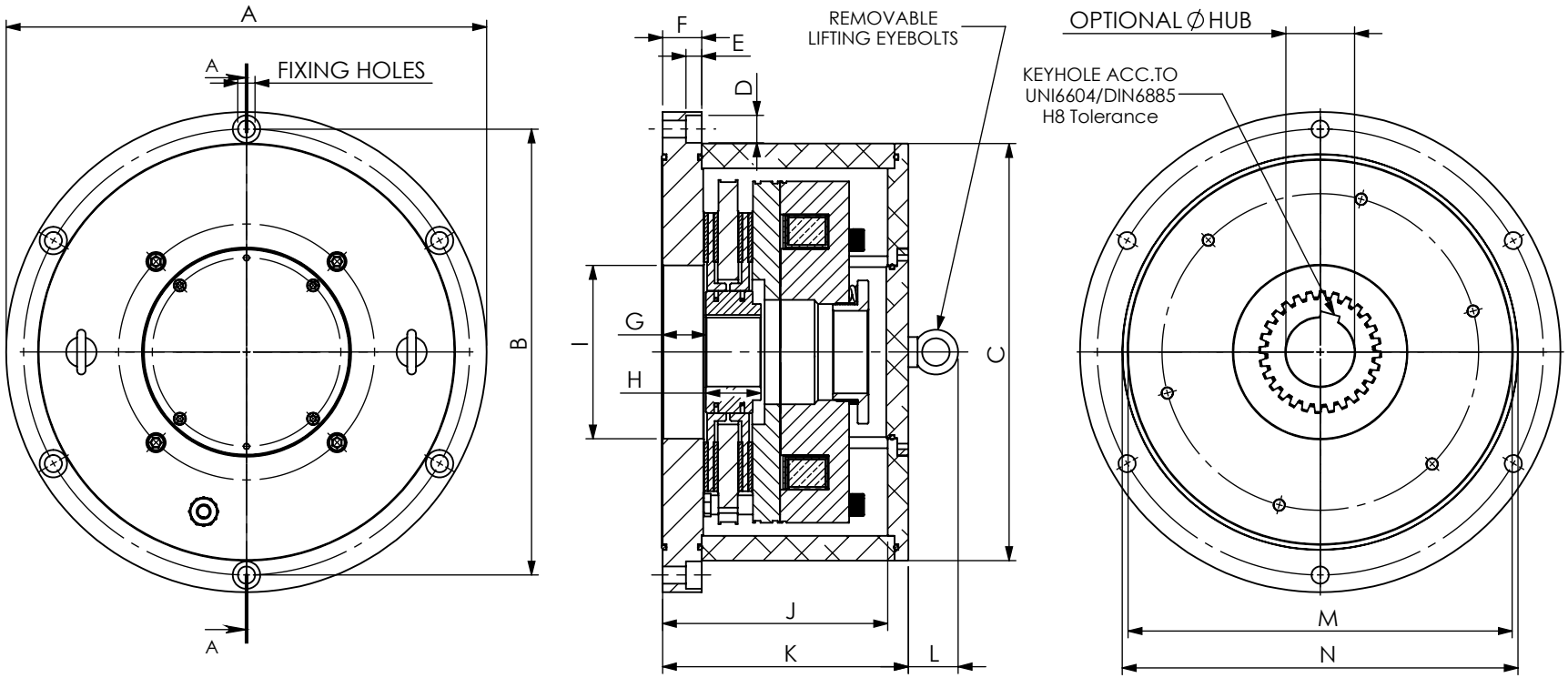


SECTION A-A
SCALE 1 : 5

| BRAKE | TORQUE (Nm) | VOLTAGE (vdc) | POWER (W) |
|---|---|---|---|
| K09 - K09F | 250 | 24 - 380 | 75 |
| K09D-K09FD | 500 | 24 - 380 | 75 |
| K10 | 800 | 24 - 380 | 156 |
| K10D | 1500 | 24 - 380 | 156 |
| K11 | 1500 | 24 - 380 | 220 |
| K11D | 3000 | 24 - 380 | 220 |
| K12 | 2250 | 24 - 380 | 225 |
| K12D | 4500 | 24 - 380 | 225 |

| K | A | B | C | D | E | F | G | H | I | J | K | L | M | N |
|---|---|---|---|---|---|---|---|---|---|---|---|---|---|---|
| K09-K09F | 349 | 324 | 303 | 20 | 11,5 | 28,5 | 31,5 | 40 | 126 | 133,5 | 148,5 | 40,3 | 279 | 287,5 |
| K09D-K09FD | 349 | 324 | 303 | 20 | 11,5 | 28,5 | 31,5 | 40 | 126 | 163,5 | 178,5 | 36,3 | 279 | 287,5 |
| K10 | 349 | 324 | 303 | 20 | 12,5 | 29,5 | 31,5 | 52 | 126 | 165 | 180 | 36,3 | 279 | 287,5 |
| K10D | 349 | 324 | 303 | 20 | 12,5 | 29,5 | 31,8 | 80 | 126 | 200 | 215 | 36,3 | 279 | 287,5 |
| K11 | 418 | 390 | 368 | 20 | 12 | 30 | 35,5 | 52 | 175 | 180 | 195 | 36,3 | 356 | 365 |
| K11D | 418 | 390 | 368 | 20 | 12 | 30 | 35,5 | 80 | 175 | 220 | 235 | 36,3 | 356 | 365 |
| K12 | 507 | 482 | 457 | 20 | 12 | 30 | 35,5 | 70 | 150 | 220 | 220 | 36,3 | 445 | 453 |
| K12D | 507 | 482 | 457 | 20 | 12 | 30 | 35,5 | 100 | 150 | 255 | 270 | 36,3 | 445 | 453 |

**CHEMICAL TRATMENT:**

**TERMICAL TRATMENT:**

This drawing replaces all previous revisions

**REV.:** 12/06/2023 08:37:58

**GENERAL TOLERANCES ACCORDING TO:** UNI -EN 22768-cK

**GENERAL Ra:** 6.3 / 3.2 ( 3.2 / 1.6 ; 1.2 / 0.8 RETTIFICA )

**CHARATERISTICS DEFINITION:**

| SYMBOL | DEFINITION |
|---|---|
| n | CRITICAL DIMENSION QUALITY CONTROL BALOON |
| n | STANDARD DIMENSION QUALITY CONTROL BALOON |

**NON DIMENSIONED EDGES:** 0,2x45°

**DRAWING NAME:**

# K0X-K0XF Brake Group Metal cover

**MATERIAL:**

Temporiti srl
Via Mattei, 8 - 20010 Mesero (MI)
tel. 02 9787331 - fax 02 97289574

A4

**PESO:** g

**DRAWED BY:** FF **CHECKED BY:** GO **SCALE:** 1:2 **PAGE** 1 di 1

Il presente disegno è proprietà escusiva di Temporiti srl che si riserva il diritto di apportare modifiche in qualsiasi momento e senza preavviso. Riproduzione vietata senza autorizzazione.
*This drawing is property of Temporiti srl that reserves the right to make changes at any time and witout notice. Reproduction forbidden without permission.*